General Aptitude (GA)

Q.1 – Q.5 Carry ONE mark Each

Q.1 If '→' denotes increasing order of intensity, then the meaning of the words [simmer → seethe → smolder] is analogous to [break → raze → _____]. Which one of the given options is appropriate to fill the blank?

(A) obfuscate

(B) obliterate

(C) fracture

(D) fissure

GATE 2024

Q.2 In a locality, the houses are numbered in the following way:

The house-numbers on one side of a road are consecutive odd integers starting from 301, while the house-numbers on the other side of the road are consecutive even numbers starting from 302. The total number of houses is the same on both sides of the road.

If the difference of the sum of the house-numbers between the two sides of the road is 27, then the number of houses on each side of the road is

(A) 27

(B) 52

(C) 54

(D) 26

Q.3 For positive integers p and q, with $\frac{p}{q} \neq 1$, $\left(\frac{p}{q}\right)^{\frac{p}{q}} = p^{\left(\frac{p}{q}-1\right)}$. Then,

(A) $q^p = p^q$

(B) $q^p = p^{2q}$

(C) $\sqrt{q} = \sqrt{p}$

(D) $\sqrt[p]{q} = \sqrt[q]{p}$

Q.4 Which one of the given options is a possible value of x in the following sequence?

$$3, 7, 15, x, 63, 127, 255$$

(A) 35

(B) 40

(C) 45

(D) 31

Q.5 On a given day, how many times will the second-hand and the minute-hand of a clock cross each other during the clock time 12:05:00 hours to 12:55:00 hours?

(A) 51

(B) 49

(C) 50

(D) 55

Q.6 – Q.10 Carry TWO marks Each

Q.6 In the given text, the blanks are numbered (i)−(iv). Select the best match for all the blanks.

From the ancient Athenian arena to the modern Olympic stadiums, athletics _____(i)_____ the potential for a spectacle. The crowd _____(ii)_____ with bated breath as the Olympian artist twists his body, stretching the javelin behind him. Twelve strides in, he begins to cross-step. Six cross-steps _____(iii)_____ in an abrupt stop on his left foot. As his body _____(iv)_____ like a door turning on a hinge, the javelin is launched skyward at a precise angle.

(A)	(i) hold	(ii) waits	(iii) culminates	(iv) pivot
(B)	(i) holds	(ii) wait	(iii) culminates	(iv) pivot
(C)	(i) hold	(ii) wait	(iii) culminate	(iv) pivots
(D)	(i) holds	(ii) waits	(iii) culminate	(iv) pivots

GATE 2024

Q.7 Three distinct sets of indistinguishable twins are to be seated at a circular table that has 8 identical chairs. Unique seating arrangements are defined by the relative positions of the people.

How many unique seating arrangements are possible such that each person is sitting next to their twin?

(A) 12

(B) 14

(C) 10

(D) 28

GATE 2024

Q.8 The chart given below compares the Installed Capacity (MW) of four power generation technologies, T1, T2, T3, and T4, and their Electricity Generation (MWh) in a time of 1000 hours (h).

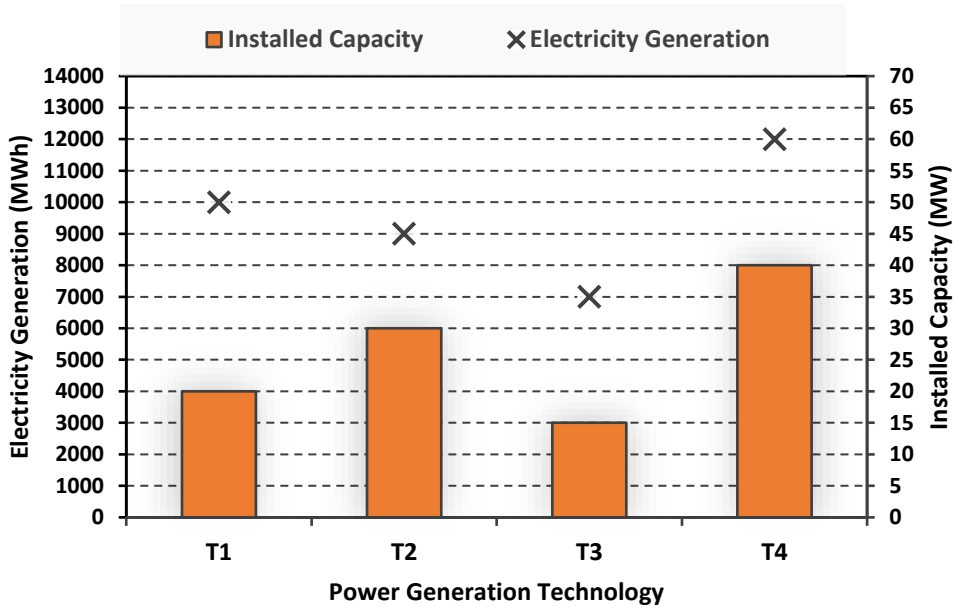

The Capacity Factor of a power generation technology is:

$$\text{Capacity Factor} = \frac{\text{Electricity Generation (MWh)}}{\text{Installed Capacity (MW)} \times 1000\ \text{(h)}}$$

Which one of the given technologies has the highest Capacity Factor?

(A) T1

(B) T2

(C) T3

(D) T4

Q.9 In the 4 × 4 array shown below, each cell of the first three columns has either a cross (X) or a number, as per the given rule.

1	1	2	
2	X	3	
2	X	4	
1	2	X	

Rule: The number in a cell represents the count of crosses around its immediate neighboring cells (left, right, top, bottom, diagonals).

As per this rule, the **maximum** number of crosses possible in the empty column is

(A) 0

(B) 1

(C) 2

(D) 3

GATE 2024

Q.10 During a half-moon phase, the Earth-Moon-Sun form a right triangle. If the Moon-Earth-Sun angle at this half-moon phase is measured to be 89.85°, the ratio of the Earth-Sun and Earth-Moon distances is closest to

(A) 328

(B) 382

(C) 238

(D) 283

GATE 2024

Q.11 – Q.35 Carry ONE mark Each

Q.11 The smallest positive root of the equation

$$x^5 - 5\,x^4 - 10\,x^3 + 50\,x^2 + 9\,x - 45 = 0$$

lies in the range

(A) $0 < x \leq 2$

(B) $2 < x \leq 4$

(C) $6 \leq x \leq 8$

(D) $10 \leq x \leq 100$

Q.12 The second-order differential equation in an unknown function $u: u(x, y)$ is defined as

$$\frac{\partial^2 u}{\partial x^2} = 2$$

Assuming $g: g(x), f: f(y)$, and $h: h(y)$, the general solution of the above differential equation is

(A) $u = x^2 + f(y) + g(x)$

(B) $u = x^2 + x\,f(y) + h(y)$

(C) $u = x^2 + x\,f(y) + g(x)$

(D) $u = x^2 + f(y) + y\,g(x)$

Q.13 The probability that a student passes only in Mathematics is $\frac{1}{3}$. The probability that the student passes only in English is $\frac{4}{9}$. The probability that the student passes in both of these subjects is $\frac{1}{6}$. The probability that the student will pass in at least one of these two subjects is

(A) $\frac{17}{18}$

(B) $\frac{11}{18}$

(C) $\frac{14}{18}$

(D) $\frac{1}{18}$

Q.14 The three-dimensional state of stress at a point is given by

$$\sigma = \begin{pmatrix} 10 & 0 & 0 \\ 0 & 40 & 0 \\ 0 & 0 & 0 \end{pmatrix} \text{MPa.}$$

The maximum shear stress at the point is

(A) 20 MPa

(B) 15 MPa

(C) 5 MPa

(D) 25 MPa

Q.15 Concrete of characteristic strength 30 MPa is required. If 40 specimens of concrete cubes are to be tested, the minimum number of specimens having at least 30 MPa strength should be

(A) 35

(B) 37

(C) 38

(D) 39

Q.16 Consider the statements P and Q.

P: Client's Preliminary Estimate is used for budgeting costs toward the end of planning and design phase.

Q: Client's Detailed Estimate is used for controlling costs during the execution of the project.

Which one of the following options is CORRECT?

(A) Both P and Q are TRUE

(B) P is TRUE and Q is FALSE

(C) Both P and Q are FALSE

(D) P is FALSE and Q is TRUE

Q.17 The following figure shows the arrangement of formwork for casting a cantilever RC beam.

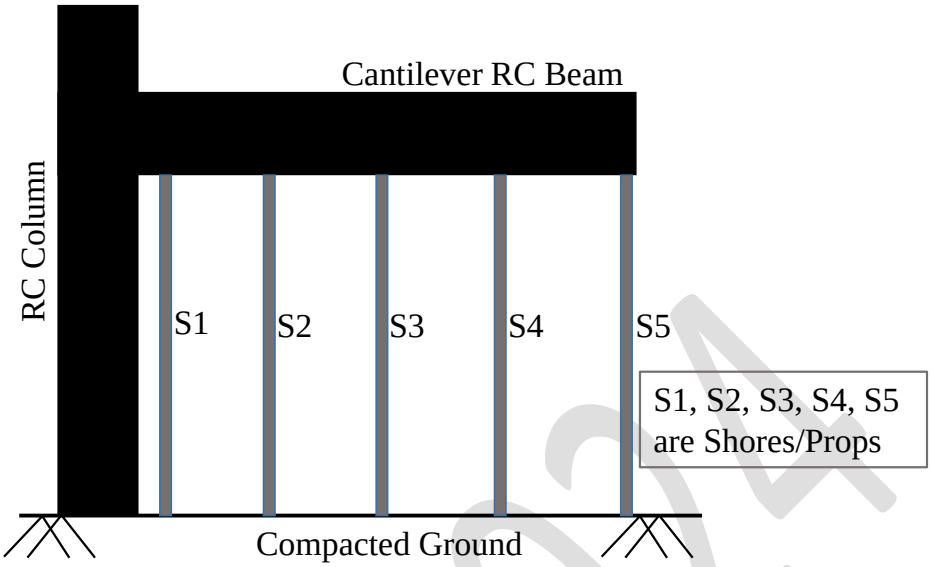

The correct sequence of removing the Shores/Props is

(A) S1→S2→S3→S4→S5

(B) S5→S4→S3→S2→S1

(C) S3→S2→S4→S1→S5

(D) S3→S4→S2→S5→S1

Q.18 A 2 m wide strip footing is founded at a depth of 1.5 m below the ground level in a homogeneous pure clay bed. The clay bed has unit cohesion of 40 kPa. Due to seasonal fluctuations of water table from peak summer to peak monsoon period, the net ultimate bearing capacity of the footing, as per Terzaghi's theory, will

(A) remain the same

(B) decrease

(C) increase

(D) become zero

Q.19 Consider the statements P and Q.

P: Soil particles formed by mechanical weathering, and close to their origin are generally subrounded.

Q: Activity of the clay physically signifies its swell potential.

Which one of the following options is CORRECT?

(A) Both P and Q are TRUE

(B) P is TRUE and Q is FALSE

(C) Both P and Q are FALSE

(D) P is FALSE and Q is TRUE

Q.20 The number of degrees of freedom for a natural open channel flow with a mobile bed is

(A) 2

(B) 3

(C) 4

(D) 5

Q.21 The following table gives various components of Municipal Solid Waste (MSW) and a list of treatment/separation techniques.

Component of MSW	Treatment/separation technique
P - Ferrous metals	i - Incineration
Q - Aluminum and copper	ii - Rapid composting
R - Food waste	iii - Eddy current separator
S - Cardboard	iv - Magnetic separator

The CORRECT match is

(A) P-iii, Q-iv, R-i, S-ii

(B) P-iv, Q-iii, R-ii, S-i

(C) P-iii, Q-iv, R-ii, S-i

(D) P-iv, Q-iii, R-i, S-ii

Q.22 A car is travelling at a speed of 60 km/hr on a section of a National Highway having a downward gradient of 2%. The driver of the car suddenly observes a stopped vehicle on the car path at a distance 130 m ahead, and applies brake. If the brake efficiency is 60%, coefficient of friction is 0.7, driver's reaction time is 2.5 s, and acceleration due to gravity is 9.81 m/s^2, the distance (in meters) required by the driver to bring the car to a safe stop lies in the range

(A) 126 to 130

(B) 41 to 45

(C) 33 to 37

(D) 75 to 79

Q.23 As per the International Civil Aviation Organization (ICAO), the basic runway length is increased by *x* (%) for every *y* (m) raise in elevation from the Mean Sea Level (MSL). The values of *x* and *y*, respectively, are

(A) 7% and 300 m

(B) 5% and 200 m

(C) 4% and 500 m

(D) 10% and 1000 m

Q.24 Which one of the following statements related to bitumen is FALSE?

(A) Kinematic viscosity is a measure of resistance to the flow of molten bitumen under gravity.

(B) Softer grade bitumen possesses higher softening point than hard grade bitumen.

(C) Flash point of bitumen is the lowest temperature at which application of a test flame causes vapours of the bitumen to catch an instant fire in the form of flash under specified test conditions.

(D) Ductility test is carried out on bitumen to test its adhesive property and ability to stretch.

Q.25 If the number of sides resulting in a closed traverse is increased from three to four, the sum of the interior angles increases by

(A) 90°

(B) 180°

(C) 270°

(D) 360°

Q.26 A surveyor observes a zenith angle of $93^{o}\ 00'\ 00''$ during a theodolite survey. The corresponding vertical angle is

(A) $-\ 03^{o}\ 00'\ 00''$

(B) $+\ 03^{o}\ 00'\ 00''$

(C) $-\ 87^{o}\ 00'\ 00''$

(D) $+\ 87^{o}\ 00'\ 00''$

Q.27 Among the following statements relating the fundamental lines of a transit theodolite, which one is CORRECT?

(A) The line of collimation must be perpendicular to the horizontal axis at its intersection with the vertical axis.

(B) The axis of altitude level must be perpendicular to the line of collimation.

(C) The axis of plate level must lie in a plane parallel to the vertical axis.

(D) The Vernier of vertical circle must read zero when the line of collimation is vertical.

Q.28 For the following partial differential equation,

$$x\frac{\partial^2 f}{\partial x^2} + y\frac{\partial^2 f}{\partial y^2} = \frac{x^2 + y^2}{2}$$

which of the following option(s) is/are CORRECT?

(A) elliptic for $x > 0$ and $y > 0$

(B) parabolic for $x > 0$ and $y > 0$

(C) elliptic for $x = 0$ and $y > 0$

(D) hyperbolic for $x < 0$ and $y > 0$

Q.29 The elements that DO NOT increase the strength of structural steel are

(A) Carbon

(B) Manganese

(C) Sulphur

(D) Chlorine

Q.30 Consider a balanced doubly-reinforced concrete section. If the material and other sectional properties remain unchanged, for which of the following cases will the section becomes under-reinforced?

(A) Area of tension reinforcement is increased.

(B) Area of compression reinforcement is increased.

(C) Area of tension reinforcement is decreased.

(D) Area of compression reinforcement is decreased.

Q.31 The primary air pollutant(s) is/are

(A) Sulphur dioxide

(B) Lead

(C) Ozone

(D) Sulphuric acid

GATE 2024

Q.32 Consider the data of $f(x)$ given in the table.

i	0	1	2
x_i	1	2	3
$f(x_i)$	0	0.3010	0.4771

The value of $f(1.5)$ estimated using second-order Newton's interpolation formula is _____ (*rounded off to 2 decimal places*).

Q.33 The plane frame shown in the figure has fixed support at joint A, hinge support at joint F, and roller support at joint I. In the figure, A to I indicate joints of the frame.

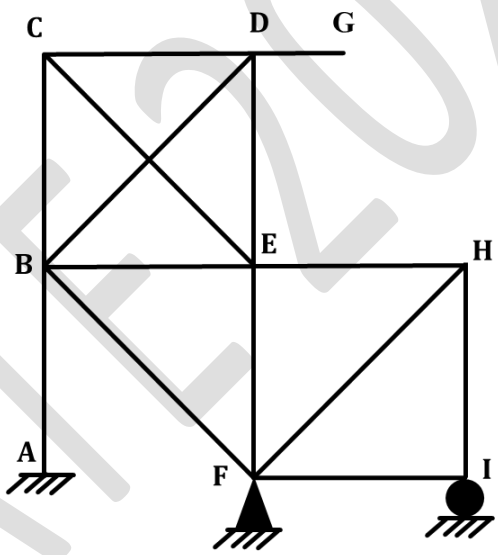

If the axial deformations are neglected, the degree of kinematic indeterminacy is _____ (*in integer*).

Q.34 An embankment is constructed with soil by maintaining the degree of saturation as 75% during compaction. The specific gravity of soil is 2.68 and the moisture content is 17% during compaction. Consider the unit weight of water as $10\ \mathrm{kN/m^3}$. The dry unit weight (in $\mathrm{kN/m^3}$) of the compacted soil is _____ (*rounded off to 2 decimal places*).

Q.35 A 30 cm diameter well fully penetrates an unconfined aquifer of saturated thickness 20 m with hydraulic conductivity of 10 m/day. Under the steady pumping rate for a long time, the drawdowns in two observation wells located at 10 m and 100 m from the pumping well are 5 m and 1 m, respectively. The corresponding pumping rate (in m^3/day) from the well is _____ (*rounded off to 2 decimal places*).

GATE 2024

Q.36 – Q.65 Carry TWO marks Each

Q.36 What are the eigenvalues of the matrix $\begin{bmatrix} 2 & 1 & 1 \\ 1 & 4 & 1 \\ 1 & 1 & 2 \end{bmatrix}$?

(A) $1, 2, 5$

(B) $1, 3, 4$

(C) $-5, 1, 2$

(D) $-5, -1, 2$

Q.37 A vector field $\vec{p}$ and a scalar field r are given by

$\vec{p} = (2x^2 - 3xy + z^2)\,\hat{\imath} + (2y^2 - 3yz + x^2)\,\hat{\jmath} + (2z^2 - 3xz + x^2)\,\hat{k}$

$r = 6x^2 + 4y^2 - z^2 - 9xyz - 2xy + 3xz - yz$

Consider the statements P and Q.

P: Curl of the gradient of the scalar field r is a null vector.

Q: Divergence of curl of the vector field $\vec{p}$ is zero.

Which one of the following options is CORRECT?

(A) Both P and Q are FALSE

(B) P is TRUE and Q is FALSE

(C) P is FALSE and Q is TRUE

(D) Both P and Q are TRUE

Q.38 Find the correct match between the plane stress states and the Mohr's circles.

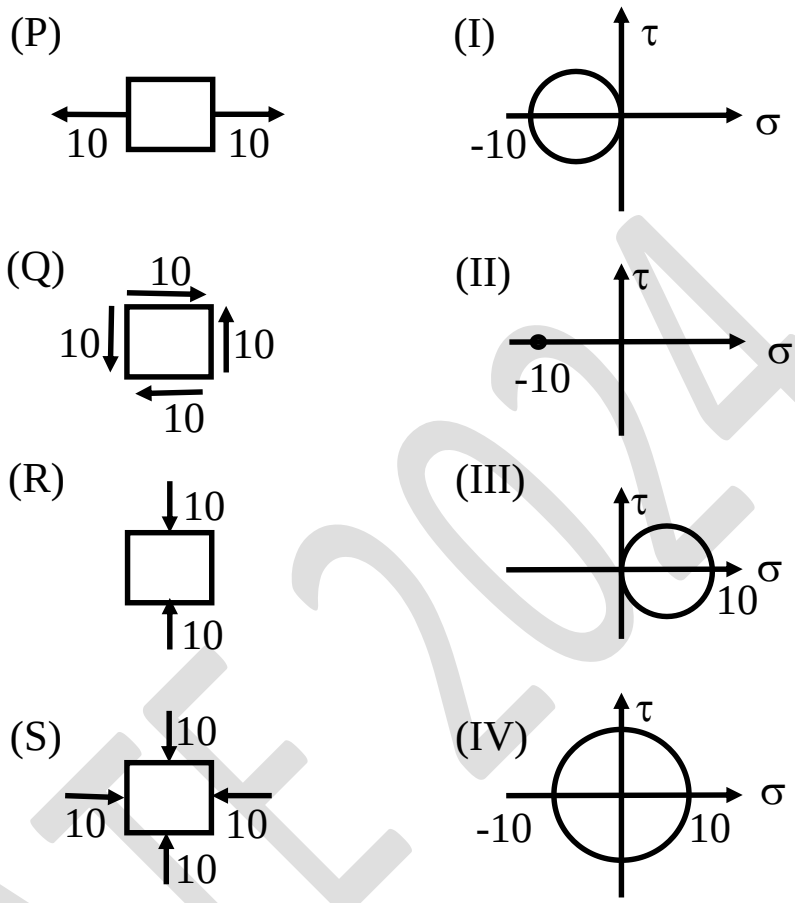

(A) (P)-(III); (Q)-(IV); (R)-(I); (S)-(II)

(B) (P)-(III); (Q)-(II); (R)-(I); (S)-(IV)

(C) (P)-(I); (Q)-(IV); (R)-(III); (S)-(II)

(D) (P)-(I); (Q)-(II); (R)-(III); (S)-(IV)

Q.39 The beam shown in the figure is subjected to a uniformly distributed downward load of intensity q between supports A and B.

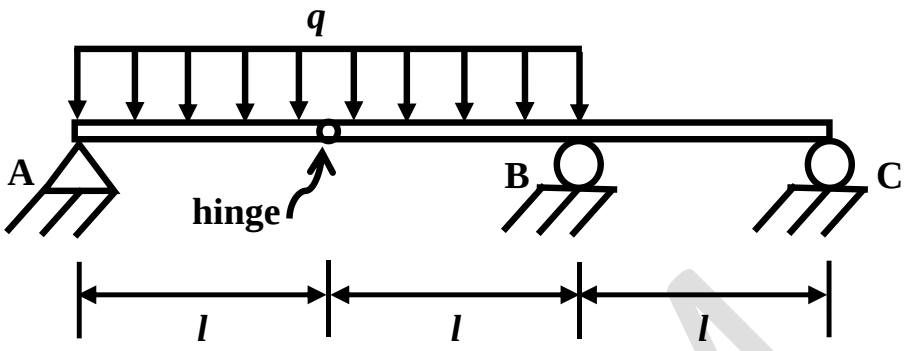

Considering the upward reactions as positive, the support reactions are

(A) $R_A = \frac{ql}{2}$; $R_B = \frac{5ql}{2}$; $R_C = -ql$

(B) $R_A = -ql$; $R_B = \frac{5ql}{2}$; $R_C = \frac{ql}{2}$

(C) $R_A = -\frac{ql}{2}$; $R_B = \frac{5ql}{2}$; $R_C = 0$

(D) $R_A = \frac{ql}{2}$; $R_B = ql$; $R_C = \frac{ql}{2}$

Q.40 A homogeneous shaft PQR with fixed supports at both ends is subjected to a torsional moment T at point Q, as shown in the figure. The polar moments of inertia of the portions PQ and QR of the shaft with circular cross-sections are J_1 and J_2, respectively. The torsional moment reactions at the supports P and R are T_P and T_R, respectively.

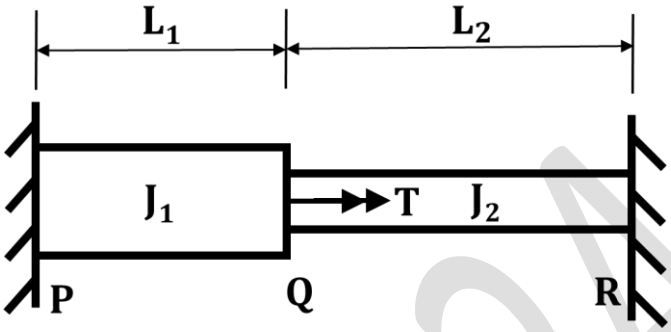

(Figure NOT to scale)

If $T_P/T_R = 4$ and $J_1/J_2 = 2$, the ratio of the lengths L_1/L_2 is

(A) 0.50

(B) 0.25

(C) 4.00

(D) 2.00

Q.41 A vertical smooth rigid retaining wall is supporting horizontal ground with dry cohesionless backfill having a friction angle of 30°. The inclinations of failure planes with respect to the major principal plane for Rankine's active and passive earth pressure conditions, respectively, are

(A) 30° and 30°

(B) 60° and 60°

(C) 30° and 60°

(D) 60° and 30°

Q.42 A flow velocity field $\vec{V}: \vec{V}(x, y)$ for a fluid is represented by

$$\vec{V} = 3\,\hat{\imath} + (5x)\,\hat{\jmath}$$

In the context of the fluid and the flow, which one of the following statements is CORRECT?

(A) The fluid is incompressible and the flow is rotational.

(B) The fluid is incompressible and the flow is irrotational.

(C) The fluid is compressible and the flow is rotational.

(D) The fluid is compressible and the flow is irrotational.

Q.43 For assessing the compliance with the emissions standards of incineration plants, a correction needs to be applied to the measured concentrations of air pollutants. The emission standard (based on 11% Oxygen) for HCl is 50 mg/Nm^3 and the measured concentrations of HCl and Oxygen in flue gas are 42 mg/Nm^3 and 13%, respectively.

Assuming 21% Oxygen in air, the CORRECT statement is:

(A) No compliance, as the corrected HCl emission is greater than the emission standard.

(B) Compliance is there, as the corrected HCl emission is lesser than the emission standard.

(C) Compliance is there, as there is no need to apply the correction since Oxygen is greater than 11% and HCl emission is lesser than the emission standard.

(D) No compliance, as the Oxygen is greater than 11% in the flue gas.

Q.44 The free mean speed is 60 km/hr on a given road. The average space headway at jam density on this road is 8 m. For a linear speed-density relationship, the maximum flow (in veh/hr/lane) expected on the road is

(A) 1875

(B) 938

(C) 2075

(D) 1038

Q.45 A map is prepared with a scale of $1:1000$ and a contour interval of $1\,\text{m}$. If the distance between two adjacent contours on the map is $10\,\text{mm}$, the slope of the ground between the adjacent contours is

(A) 30%

(B) 10%

(C) 35%

(D) 40%

Q.46 Which of the following statement(s) is/are CORRECT?

(A) Swell potential of soil decreases with an increase in the shrinkage limit.

(B) Both loose and dense sands with different initial void ratios can attain similar void ratio at large strain during shearing.

(C) Among the several corrections to be applied to the SPT-N value, the dilatancy correction is applied before all other corrections.

(D) In electrical resistivity tomography, the depth of current penetration is half of the spacing between the electrodes.

Q.47 The return period of a large earthquake for a given region is 200 years. Assuming that earthquake occurrence follows Poisson's distribution, the probability that it will be exceeded at least once in 50 years is _____ %
(*rounded off to the nearest integer*).

Q.48 A 2 m × 2 m tank of 3 m height has inflow, outflow and stirring mechanisms. Initially, the tank was half-filled with fresh water. At t = 0, an inflow of a salt solution of concentration 5 g/m^3 at the rate of 2 litre/s and an outflow of the well stirred mixture at the rate of 1 litre/s are initiated. This process can be modelled using the following differential equation:

$$\frac{dm}{dt} + \frac{m}{6000 + t} = 0.01$$

where m is the mass (grams) of the salt at time t (seconds). The mass of the salt (in grams) in the tank at 75% of its capacity is _____
(*rounded off to 2 decimal places*).

Q.49 The plane truss shown in the figure has 13 joints and 22 members. The truss is made of a homogeneous, prismatic, linearly elastic material. All members have identical axial rigidity. A to M indicate the joints of the truss. The truss has pin supports at joints A and L and roller support at joint K. The truss is subjected to a 10 kN vertically downward force at joint H and a 10 kN horizontal force in the rightward direction at joint B as shown.

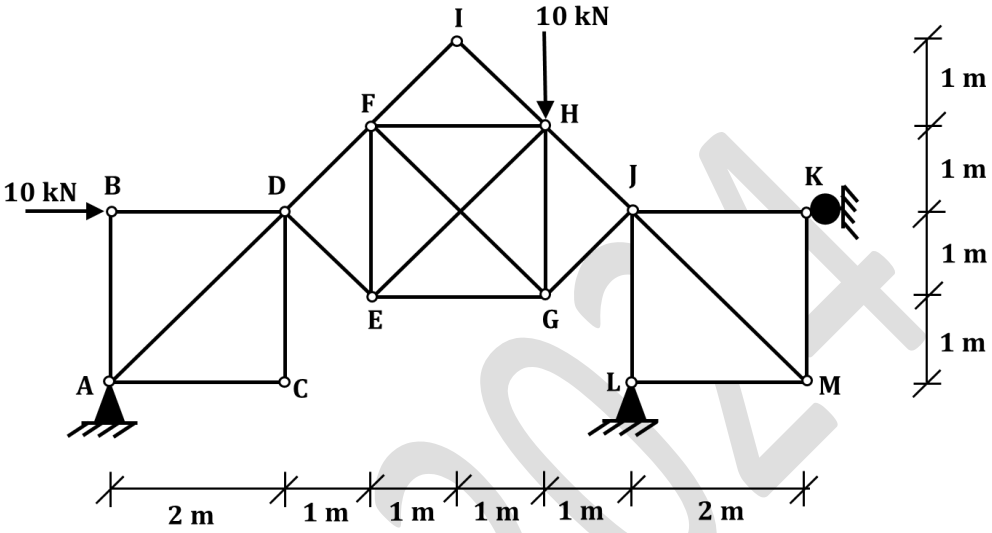

(Figure NOT to scale)

The magnitude of the reaction (in kN) at the pin support L is _____ (*rounded off to 1 decimal place*).

Q.50 An inverted T-shaped concrete beam (B1) in the figure, with centroidal axis $X - X$, is subjected to an effective prestressing force of 1000 kN acting at the bottom kern point of the beam cross-section. Also consider an identical concrete beam (B2) with the same grade of concrete but without any prestressing force.

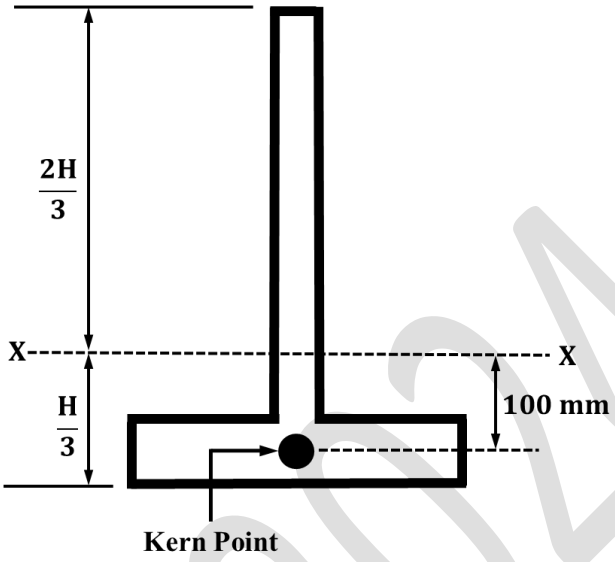

(Figure NOT to scale)

The additional cracking moment (in kN. m) that can be carried by beam B1 in comparison to beam B2 is _____ (*rounded off to the nearest integer*).

Q.51 The initial cost of an equipment is Rs. 1,00,000. Its salvage value at the end of accounting life of 5 years is Rs. 10,000. The difference in depreciation (in Rs.) computed using 'double-declining balance method' and 'straight line method' of depreciation in Year-2 is _____ (*in positive integer*).

Q.52 A slab panel with an effective depth of 250 mm is reinforced with 0.2% main reinforcement using 8 mm diameter steel bars. The uniform center-to-center spacing (in mm) at which the 8 mm diameter bars are placed in the slab panel is _____ (*rounded off to the nearest integer*).

Q.53 The total primary consolidation settlement (S_c) of a building constructed on a 10 m thick saturated clay layer is estimated to be 50 mm. After 300 days of the construction of the building, primary consolidation settlement was reported as 10 mm. The additional time (in days) required to achieve 50% of S_c will be _____ (*rounded off to the nearest integer*).

Q.54 An infinite slope is made up of cohesionless soil with seepage parallel to and up to the sloping surface. The angle of slope is 30° with respect to horizontal ground surface. The unit weights of the saturated soil and water are 20 kN/m^3 and 10 kN/m^3, respectively.

The minimum angle of shearing resistance of the soil (in degrees) for the critically stable condition of the slope is _____ (*rounded off to the nearest integer*).

Q.55 A soil sample was consolidated at a cell pressure of 20 kPa and a back pressure of 10 kPa for 24 hours during a consolidated undrained (CU) triaxial test. The cell pressure was increased to 30 kPa on the next day and it resulted in the development of pore water pressure of 1 kPa. The soil sample failed when the axial stress was gradually increased to 50 kPa. The pore water pressure at failure was recorded as 21 kPa. The value of Skempton's pore pressure parameter *B* for the soil sample is _____ (*rounded off to 2 decimal places*).

Q.56 The ordinates of a 1-hour unit hydrograph (UH) are given below.

Time (hours)	0	1	2	3	4	5
Ordinates of 1-hour UH (m^3/s)	0	13	50	80	95	85

Time (hours)	6	7	8	9	10	11
Ordinates of 1-hour UH (m^3/s)	55	35	15	10	3	0

These ordinates are used to derive a 3-hour UH. The peak discharge (in m^3/s) for the derived 3-hour UH is _____ (*rounded off to the nearest integer*).

Q.57 A standard round bottom triangular canal section as shown in the figure has a bed slope of 1 in 200. Consider the Chezy's coefficient as 150 $m^{1/2}/s$.

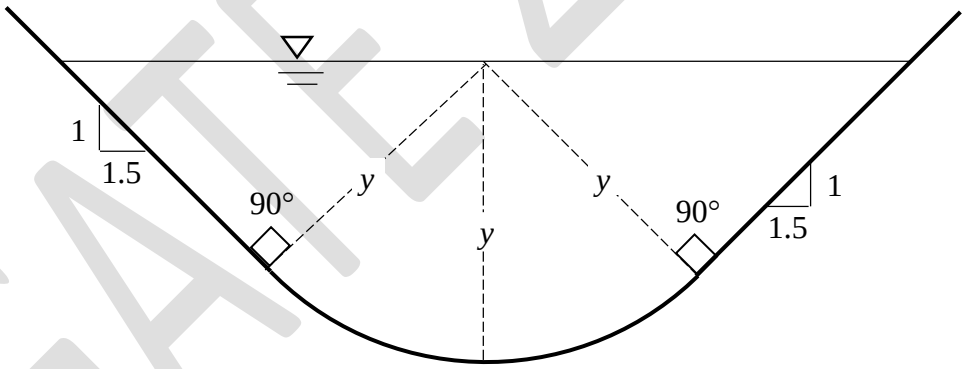

(Figure NOT to scale)

The normal depth of flow, y (in meters) for carrying a discharge of 20 m^3/s is _____ (*rounded off to 2 decimal places*).

Q.58 A spillway has unit discharge of 7.5 $m^3/s/m$. The flow depth at the downstream horizontal apron is 0.5 m. The tail water depth (in meters) required to form a hydraulic jump is _____ (*rounded off to 2 decimal places*).

Q.59 A 5 m × 5 m closed tank of 10 m height contains water and oil, and is connected to an overhead water reservoir as shown in the figure. Use γ_w = 10 kN/m^3 and Specific gravity of oil = 0.8.

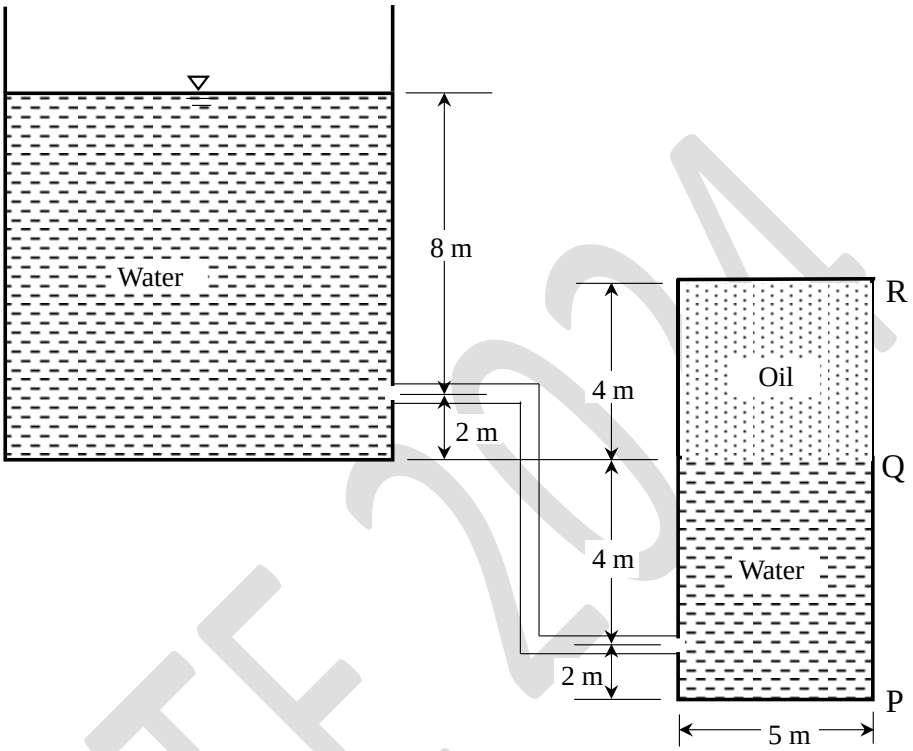

(Figure NOT to scale)

The total force (in kN) due to pressure on the side PQR of the tank is _____ (*rounded off to the nearest integer*).

Q.60 Activated carbon is used to remove a pollutant from wastewater in a mixed batch reactor, which follows first-order reaction kinetics.

At a reaction rate of 0.38 /day, the time (in days) required to remove the pollutant by 95% is _____ (*rounded off to 1 decimal place*).

Q.61 A water treatment plant treats 25 MLD water with a natural alkalinity of 4.0 mg/L (as $CaCO_3$). It is estimated that, during coagulation of this water, 450 kg/day of calcium bicarbonate ($Ca(HCO_3)_2$) is required based on the alum dosage.

Consider the atomic weights as: Ca-40, H-1, C-12, O-16.

The quantity of pure quick lime, CaO (in kg) required for this process per day is_____ (*rounded off to 2 decimal places*).

Q.62 The number of trains and their corresponding speeds for a curved Broad Gauge section with 437 m radius, are

- 20 trains travel at a speed of 40 km/hr
- 15 trains travel at a speed of 50 km/hr
- 12 trains travel at a speed of 60 km/hr
- 8 trains travel at a speed of 70 km/hr
- 3 trains travel at a speed of 80 km/hr

If the gauge (center-to-center distance between the rail heads) is taken as 1750 mm, the required equilibrium cant (in mm) will be _____ (*rounded off to the nearest integer*).

GATE 2024

Q.63 The figure presents the trajectories of six vehicles within a time-space domain. The number in the parentheses represents unique identification of each vehicle.

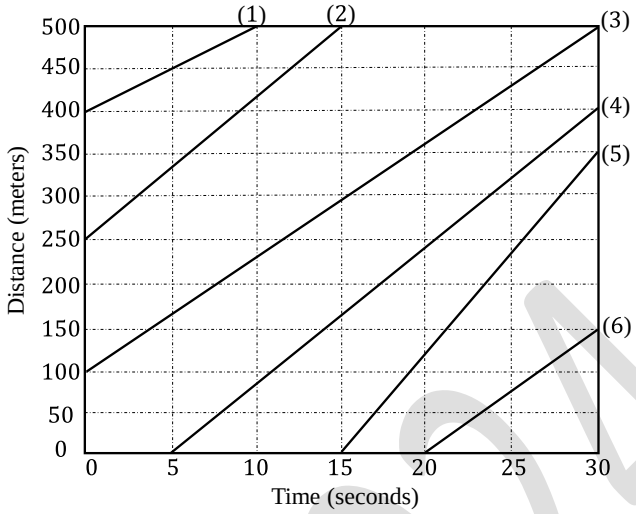

(Figure NOT to scale)

The mean speed (in km/hr) of the vehicles in the entire time-space domain is _____ (*rounded off to the nearest integer*).

Q.64 The following data is obtained from an axle load survey at a site:

Average rear axle load = 12000 kg
Number of commercial vehicles = 800 per day

The pavement at this site would be reconstructed over a period of 5 years from the date of survey. The design life of the reconstructed pavement is 15 years. Use the standard axle load as 8160 kg and the annual average vehicle growth rate as 4.0%. Assume that Equivalent Wheel Load Factor (EWLF) and Vehicle Damage Factor (VDF) are equal.

The cumulative standard axle (in msa) for the pavement design is _____ (*rounded off to 2 decimal places*).

Q.65 A bird is resting on a point P at a height of 8 m above the Mean Sea Level (MSL). Upon hearing a loud noise, the bird flies parallel to the ground surface and reaches a point Q which is located at a height of 3 m above MSL. The ground surface has a falling gradient of 1 in 2. Ignoring the effects of curvature and refraction, the horizontal distance (in meters) between points P and Q is _____ (*in integer*).

GATE 2024

GRADUATE APTITUDE TEST IN ENGINEERING 2024

अभियांत्रिकी स्नातक अभिक्षमता परीक्षा २०२४

ORGANISING INSTITUTE: INDIAN INSTITUTE OF SCIENCE, BENGALURU

Civil Engineering (CE1)

Master Answer Key

Q. No.	Session	Question Type	Section	Key/Range	Mark
1	3	MCQ	GA	B	1
2	3	MCQ	GA	A	1
3	3	MCQ	GA	A	1
4	3	MCQ	GA	D	1
5	3	MCQ	GA	C	1
6	3	MCQ	GA	D	2
7	3	MCQ	GA	A	2
8	3	MCQ	GA	A	2
9	3	MCQ	GA	C	2
10	3	MCQ	GA	B	2
11	3	MCQ	CE-1	A	1
12	3	MCQ	CE-1	B	1
13	3	MCQ	CE-1	A	1
14	3	MCQ	CE-1	A	1
15	3	MCQ	CE-1	C	1
16	3	MCQ	CE-1	A	1
17	3	MCQ	CE-1	B	1
18	3	MCQ	CE-1	A	1
19	3	MCQ	CE-1	D	1
20	3	MCQ	CE-1	C	1
21	3	MCQ	CE-1	B	1
22	3	MCQ	CE-1	D	1
23	3	MCQ	CE-1	A	1
24	3	MCQ	CE-1	B	1
25	3	MCQ	CE-1	B	1
26	3	MCQ	CE-1	A	1
27	3	MCQ	CE-1	A	1
28	3	MSQ	CE-1	A;D	1
29	3	MSQ	CE-1	C;D	1

30	3	MSQ	CE-1	B;C	1
31	3	MSQ	CE-1	A;B	1
32	3	NAT	CE-1	0.16 to 0.18	1
33	3	NAT	CE-1	9 to 9	1
34	3	NAT	CE-1	16.60 to 16.80	1
35	3	NAT	CE-1	1852.00 to 1858.00	1
36	3	MCQ	CE-1	A	2
37	3	MCQ	CE-1	D	2
38	3	MCQ	CE-1	A	2
39	3	MCQ	CE-1	A	2
40	3	MCQ	CE-1	A	2
41	3	MCQ	CE-1	B	2
42	3	MCQ	CE-1	A	2
43	3	MCQ	CE-1	A	2
44	3	MCQ	CE-1	A	2
45	3	MCQ	CE-1	B	2
46	3	MSQ	CE-1	A;B	2
47	3	NAT	CE-1	21 to 23	2
48	3	NAT	CE-1	24.50 to 25.50	2
49	3	NAT	CE-1	7.0 to 8.0	2
50	3	NAT	CE-1	299 to 301	2
51	3	NAT	CE-1	6000 to 6000	2
52	3	NAT	CE-1	99 to 102	2
53	3	NAT	CE-1	1550 to 1600	2
54	3	NAT	CE-1	48 to 50	2
55	3	NAT	CE-1	0.09 to 0.11 OR 0.55 to 0.65	2
56	3	NAT	CE-1	86 to 88	2
57	3	NAT	CE-1	1.09 to 1.12	2
58	3	NAT	CE-1	4.40 to 4.70	2
59	3	NAT	CE-1	5575 to 5585	2
60	3	NAT	CE-1	7.8 to 8.0	2
61	3	NAT	CE-1	99.00 to 100.00	2
62	3	NAT	CE-1	86 to 90	2
63	3	NAT	CE-1	54 to 58	2
64	3	NAT	CE-1	40.60 to 40.90	2
65	3	NAT	CE-1	10 to 10	2